Menlo Park Notebook #96 [N-79-09-20]

This notebook covers the period September-December 1879, with a few entries possibly dating from 1880. All of the entries are by Samuel D. Mott. Included are drawings of lamps, generators, vacuum pumps, and other devices such as the phonograph and the telephone. There are occasionally notes accompanying the drawings, some of which were used as illustrations in the Scientific American. The label on the front cover is marked "Private" and "S. D. Mott." The first page is inscribed "Edison's Inventions Notes & c." Both the cover and the first page are stamped "Edison Pioneers 40 West 40th Street New York City." The book contains 284 numbered pages.

Blank pages not filmed: 53-284.

Missing page numbers: 9-10.

Edison's Inventions
Notes &c.

EDISON PIONEERS
ROOM 1102
40 WEST 40TH STREET
NEW YORK CITY

a	b	7"
a'	f'	2 3/4"
a''	f''	3' 1"
f''	f'''	10"
c	d	1 1/2"
c'	d'	8"
c''	d''	4"
e	e'''	22"
e	f	5"
f	f'	22"
g	h	4' 1"
h	h'	8"
g	h''	24"
h''	h'''	5"
a	3	5' 1"
a	1	21 1/2"
3	4	31"
5	6	3' 9"
c''	g''	7"

Edison's Dynamometer and Furnace Machine

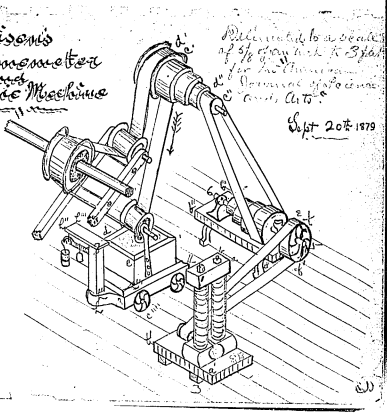

Sept 20th 1879

Sept. 25th. 1879.
S. D. Mott. del.

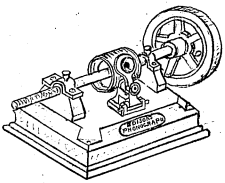

Edison's Pride.

Edison's combination of the Geissler and Sprengel fall tube pump to obtain high vacua.

A - Electrical test of vacuum

B - Electric lamp

C - Mercury seals

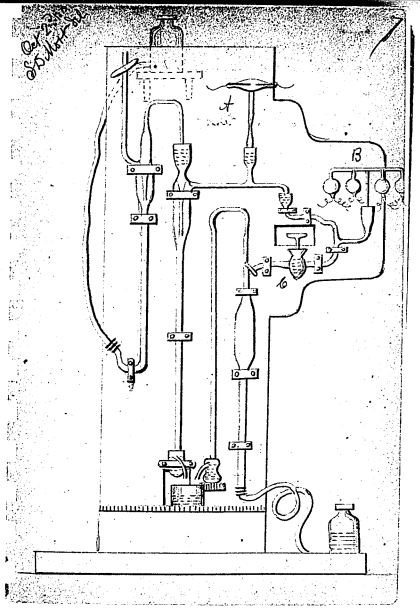

The same combination in connection with the Macleod gauge — and chamber of Sulphuric Acid (to take up moisture) and granulated Copper (to take up ammonical fumes)

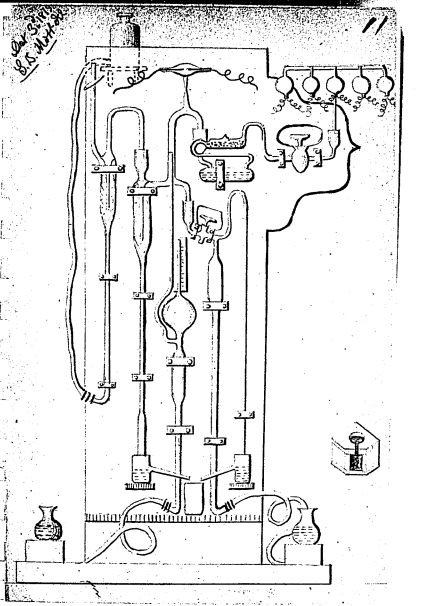

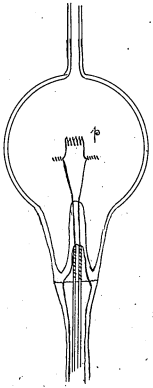

p – a platina spiral in vacuo —

Edison's Lamp as it is at present

— Oct. 1879. —

14

Illustrated in Scientific American of Oct 1879.

15

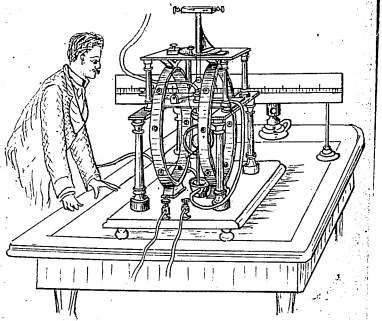

ELECTRO DYNAMOMETER.

A lamp as it appears this date (Nov 1879)

At Lamp at Clerkenwell 3 - 3oz round rolled [illegible]
[illegible] Three on the side at a 10th [illegible]
[illegible] Direct 3 gas jets - adaptation for 1 gas
[illegible] the [illegible] for [illegible] very good [illegible]
also from [illegible] (Letting [illegible])

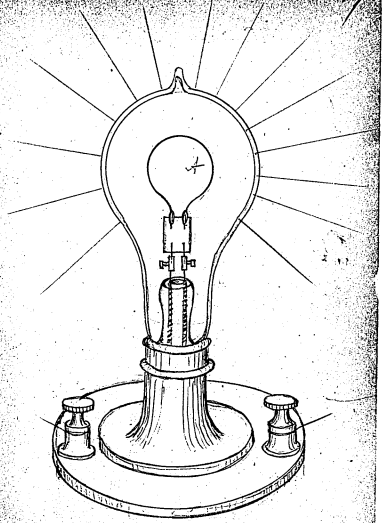

Paper Lamp
Ice 1879
Platinum lamps

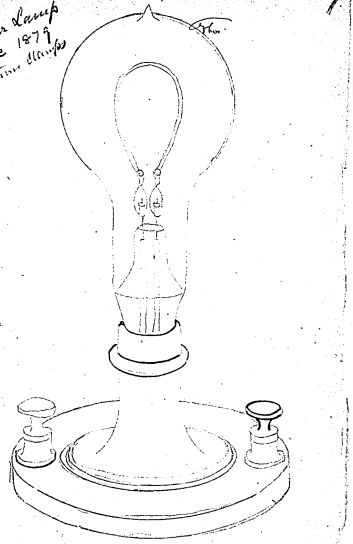

10

Illustrated in the Scientific American of
Oct 1879.

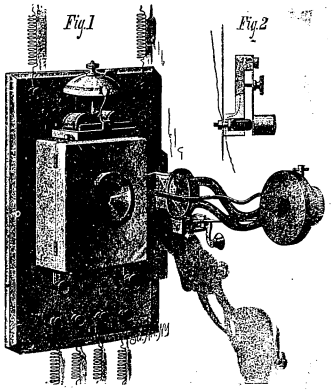

EDISON'S NEW TELEPHONE.

Delineator in Cross section by moulds for Mr Edison
Oct 15. 1879. Full size tracing

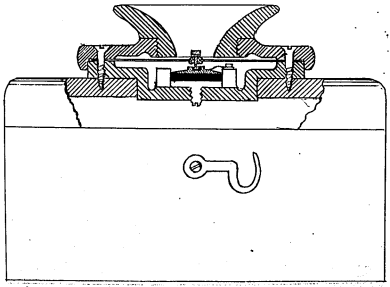

25

Delineated by myself for Mr Simm Oct 20th 1879.
One half full size tracing.——

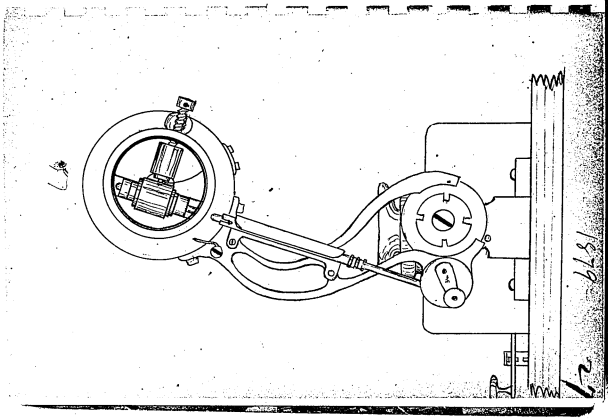

28

Delineated to show the currents connections & practical working of Edison's Telephone.

E induction Coil
Primary circuit
Secondary "
Tertiary "
A Transmitter
B Receiver.
Relay Circuit - two Artificial lines

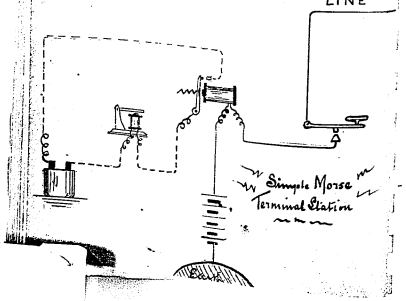

29

1579

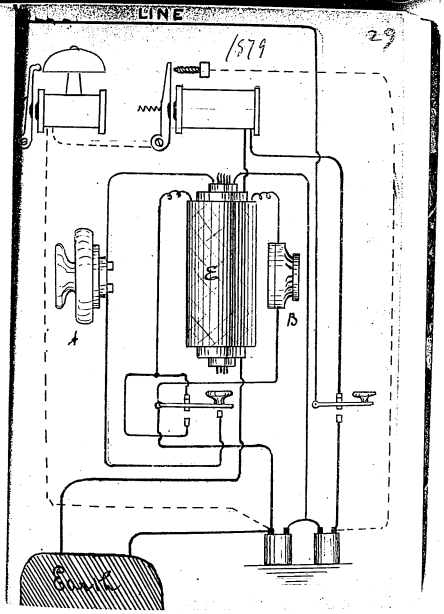

8

Delineated to show the current connection & practical working of Edison's Telephone.

E — induction coil.
—— Primary circuit
▬▬ Secondary "
▭ Tertiary "
A Transmitter
B Receiver.
Relay Circuit - in Ashes lines

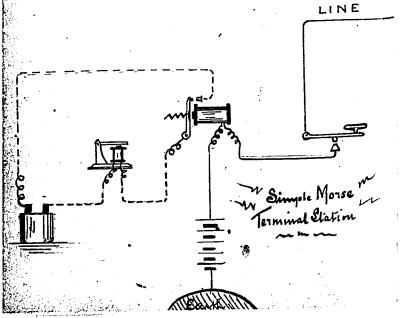

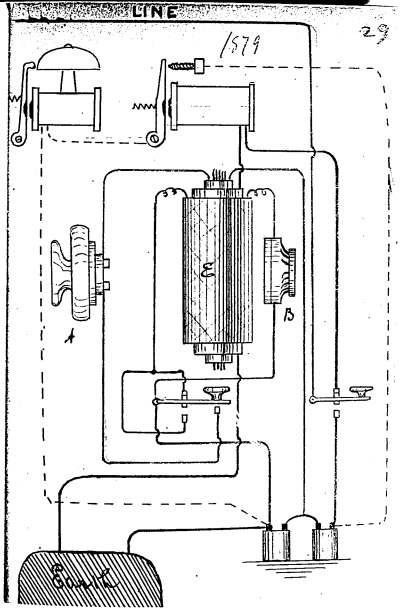

Telephone Relay

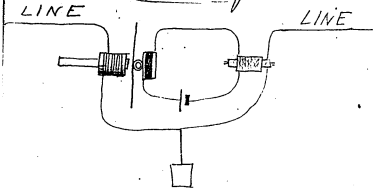

Any receiving motor no matter what its description may be would if then were friction run at the same speed as the transmitter, but as there is always friction it will run at a lower speed which speed will be such that it will set up a counter E.M.F. a little less than the transmitted. The difference will exactly represent the work. If more work is attempted to be taken from the receiver there will be a lessening of the counter E.M.F., this lessening will represent the work. For instance, if we had the friction of the machine the counter E.M.F. will be, say 98, 2 representing the work in this case. If we take of 3987 ft-lbs of work inclusive of friction with 10 ohms resistance in the circuit, the counter E.M.F. will be 90 volts to 100 volts in the transmitter.

We think that in any electromotor that the power will be within reasonable limits independent of the size of the magnets composing such motor with a given current. If the magnets are small in mass the speed will be great, if large in mass the speed will be slower, but the power will be greater to balance the loss by want of speed, but with the large magnets is given more current and consequently have the advantage. The power obtainable is probably as the square of the size of the motor magnets — double the size and you can by increasing the current obtain 4 times the ft lbs with the same economy per 100 ft. as in the smaller motor

1879

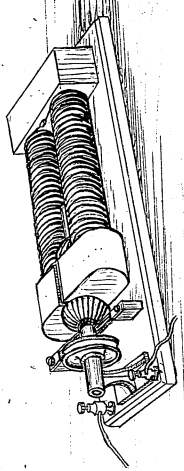

EDISON'S ELECTRIC MOTOR.

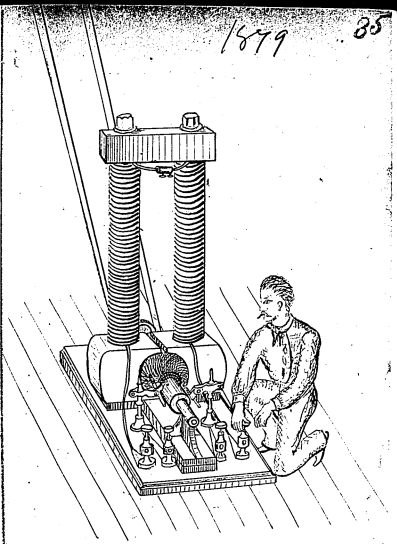

EDISON'S ELECTRIC GENERATOR.

The Meter

Its action

Points T are supposed closed, current enters from main line M through binding post E_2 and passes through the points T by means of the bar F through the hinge B to the binding post D. — The current at this point divides the larger portion of it passing around the magnet M and circuit out at the post E_1 and by means of the line H_1 to the lamp — the remaining portion at the point of division D passes through the cell and resistance coming to H_1 at E. All of it then passes through one or more translating devices such as lamp motors etc to the line H_2 and thence return main M_2. In passing around the magnet M it tends to ~~make~~ render it ~~more~~ active so as to draw down the armature A, this tendency for the break current is counteracted by the adjustable spring S — if the current by any means is abnormally great it will cause the magnet so strong as to draw the armature A and pull downwards the arm F, separating the points T and breaking the circuit

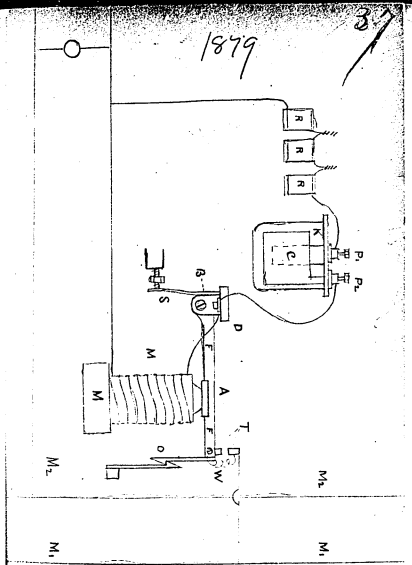

The clutch O will then close as represented in the diagram page 37 — The cord W serves to shut the circuit — the arc which would otherwise spring between the points T when the current has broken and also to prevent the armature from the circuit from acting as a vibrator.

From the binding post D a small portion of the current passes through the deposition cell K which is so constructed that every unit of current passing will deposit an amount of copper proportional to the current flowing on the plate of copper.

Resistances RRR are placed in the line so that the amount which flows through the deposition cell may be adjusted until a definite fraction of the main current is used. It is proposed to place a thin and easily weighed plate into the cell at the commencement of a fixed period & at the end of that time take it out & carry it to the central office where it will be again weighed — the difference in weight is the amount deposited. A certain number of milligrams of copper may be assumed to be equal to a foot of gas, by taking an electric light of a given intensity say 16 candles and allow it to burn for a few hours noting the deposition of copper at the same time a gas flame of equal intensity is burned and the number of cubic feet consumed noted — the resistances will then be adjusted until 1 mg for example will represent 1 Cu ft —

Bills will then for electric light will then be made out in terms of 1000 cu ft — Paris M.M. Mag Circus in Strut — H.H. Horse lines of force — L. Lamp points at which the current may be broken. W small wire A armature O clutch M magnet B hinge & spring D binding posts C copper plate R resistance coils H binding nut E.E. binding posts F Bar to which the armature A is attached

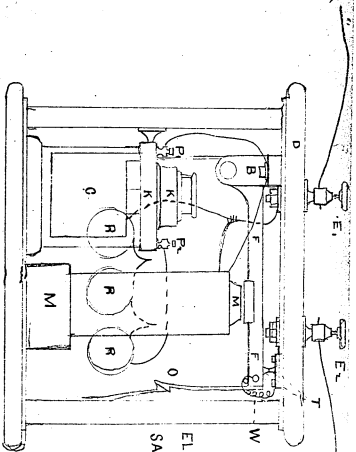

In a paper read by Mr C.E. Jones of Chorlyfield England before the association of Gas managers, May 1879 — was said: "The chief requirements of public lights 1 shadowless flame not affected by atmospheric commotions 2 uniformity of intensity 3. great penetrating power 4 Ever available without preparation and daily lighted 5 non liability of any sudden or self extinguishment 6 Shadowless 7 Commercially cheap"—

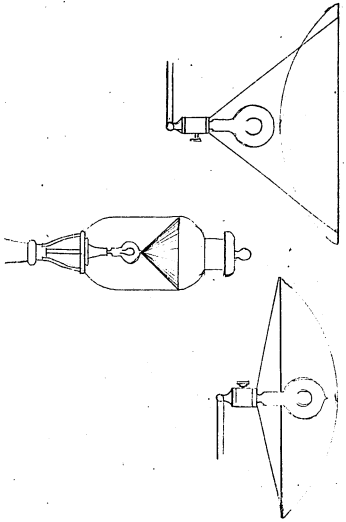

When the energy to double in a given radiating surface the light is quadrupled

With a given radiating surface, and a given energy, doubling the surface reduces the light 1/2 so that each of the two parts will have but 1/4 of the light that it originally had = quadrupling the surface requires double the energy to produce the same light.

The resistance of any lamp in multiple arc is the equal of the total resistance of all the lamps in series, the radiating surface being the same.

If any machine will keep 5 lamps of a given radiating surface and 1 ohm each resistance at 15 candle power when arranged in series then the same machine will keep 5 lamps of the same radiating surface of 25 ohms each in multiple arc at 15 candle power

The cost of conductors and machine resistances are the same for 10 one ohm lamps in series as 10 100 ohm lamps in multiple arc = the resistance of multiple arc lamps must be 100 times greater than those in series to produce same results requiring 10 arc in one circuit.

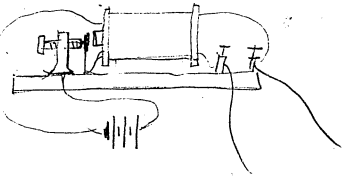

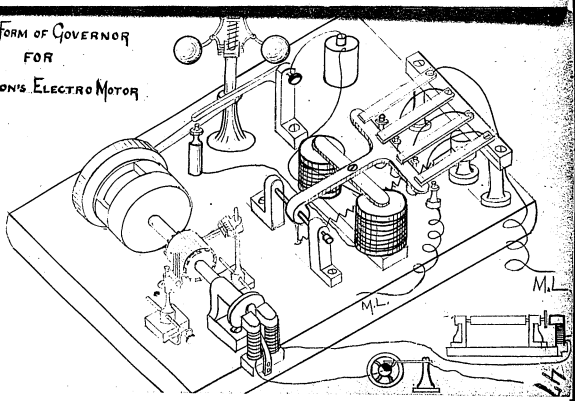

One Form of Governor
for
Edison's Electro Motor

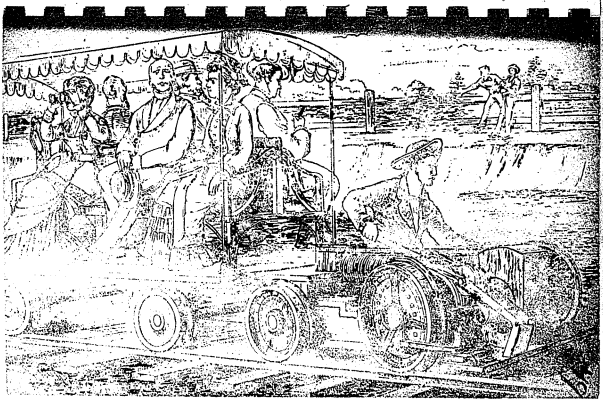

The chief improvements that have taken place in the last four years in Dynamo Electric Machines are based upon – 1st The principle of accumulation. 2d Continuous Magnetization – In the Lucas machine the principle of accumulation is employed – this machine with a Siemens Armature 3½ in diameter and 18 in effective length will deposit 28 g of Silver per hour when driven at a speed of about 2000 revs per minute by means of a 2 HP Otto Engine

Fig 1 = Armature – magnets
Fig 2 = Electro magnets

The general principle of all dynamo electric machines — The rotating within the influence of the poles of a magnet, of a soft-iron armature surrounded by one or more helices, an electric current being produced in the helices by the alternate magnetization & demagnetization of the soft-iron armature —